REVISIONS						
ZONE	LTR	DESCRIPTION	CHANGE No	DATE	BY	APPR'D
	AA	INITIAL RELEASE	C'XXXX	19JAN12	SLK	DJC
	AB	UPDATED COVERPLATE	DR53394	02SEEP15	JMM	BLM

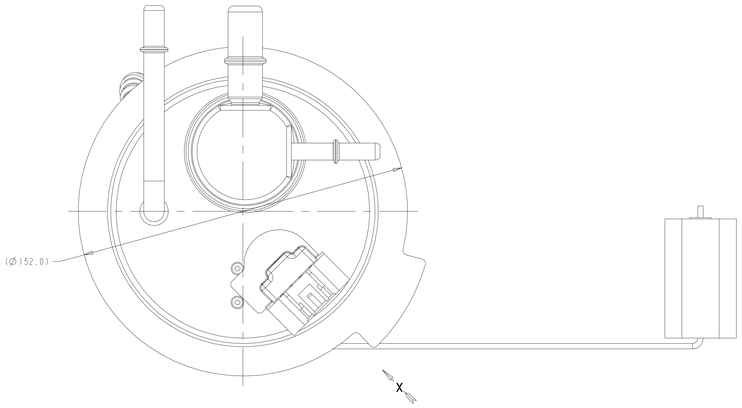

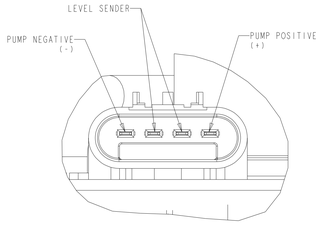

VIEW X
SCALE 2:1

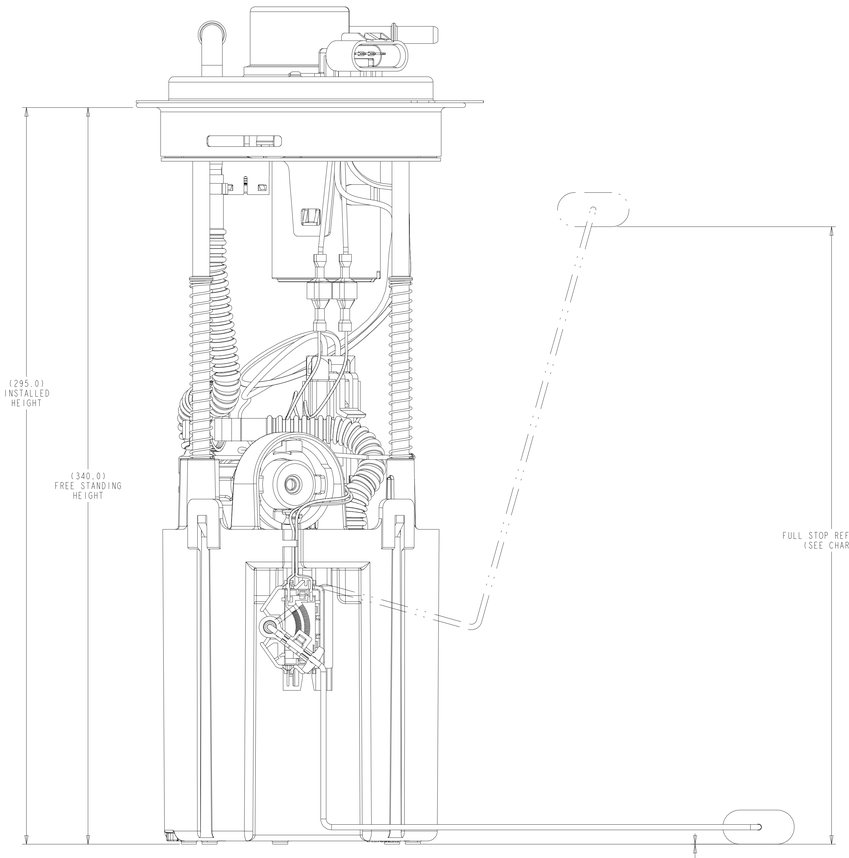

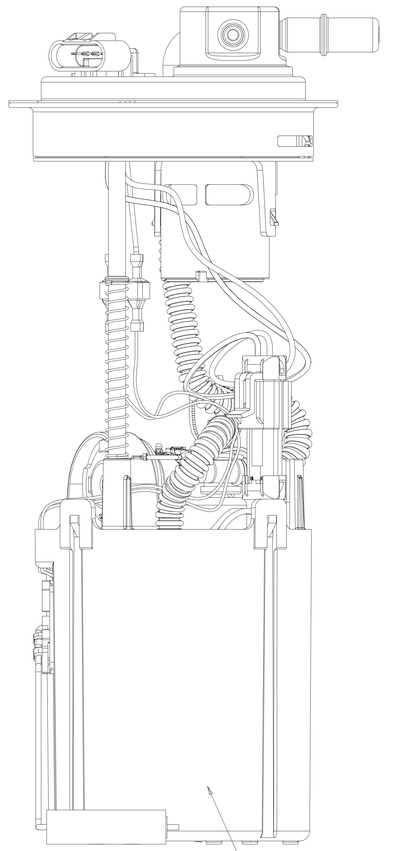

LEVEL SENDER HEIGHT VS. RESISTANCE		
POSITION	HEIGHT	RESISTANCE
FULL STOP	285±1	40±3Ω
EMPTY STOP	0±1	250±3Ω

NOTES:

1. CHANGE IN DESIGN, COMPOSITION, LOCATION OR PROCESSING FROM THE PART PREVIOUSLY APPROVED FOR PRODUCTION REQUIRES PRIOR APPROVAL BY TI AUTOMOTIVE.
2. SPECIAL CUSTOMER PACKAGING REQUIREMENTS MAY CALL FOR THE ADDITION OF SPECIFIC LABELS NOT SHOWN ON THIS DRAWING.
3. SHOWN WIRE ROUTING MAY DIFFER FROM FINISHED PRODUCT.
4. MODULE TO BE PACKAGED USING COMPONENTS NOTED ON BOM SO THAT CONTAMINATION FROM FOREIGN MATERIAL IS PREVENTED:
   - PLUG PROTECTORS ON PORTS
   - POLYBAG

▽ - DENOTES SAFETY CHARACTERISTIC
◇ - DENOTES SIGNIFICANT CHARACTERISTIC
◇ - DENOTES HIGH IMPACT CHARACTERISTIC

TI AUTOMOTIVE CONFIDENTIAL AND PROPRIETARY
THIS DRAWING IS PROPERTY OF TI AUTOMOTIVE. TI AUTOMOTIVE CLAIMS PROPRIETARY RIGHTS IN THE SUBJECT MATTER SHOWN AND DESCRIBED ON THIS DRAWING AND RETAINS ALL INTELLECTUAL PROPERTY RIGHTS. THE DRAWING IS PROVIDED FOR REFERENCE PURPOSES ONLY AND ON THE EXPRESS CONDITION THAT IT WILL BE HELD IN CONFIDENCE. THIS DRAWING SHALL NOT BE DISCLOSED TO OTHERS OR USED FOR THE PURPOSE OF MANUFACTURE BY OR PROCUREMENT FROM OTHERS OF THE ARTICLE OR PART SHOWN WITHOUT TI AUTOMOTIVE'S EXPRESS WRITTEN CONSENT. NO LICENSE OR OTHER RIGHT IS GIVEN OR IMPLIED BY THE PROVISION OF THIS DRAWING TO RECIPIENT. COPYRIGHT, TI AUTOMOTIVE 2010, ALL RIGHTS RESERVED.

METRIC
ALL DIMENSIONS ARE IN MILLIMETERS

DO NOT SCALE
DECIMAL TOLERANCES UNLESS OTHERWISE SPECIFIED
ONE PLACE ±0.25 TWO PLACE ±0.13 ANGLES ±1°

THIRD ANGLE PROJECTION
DIMENSIONS IN ACCORDANCE WITH ASME Y14.5 - 2009

TI Automotive
630 COLUMBIA ST.
CARO, MI 48723
+1 989.673.7727

ENGINEER	D.CATLIN	07MAY13	MATERIAL/SPECIFICATION: N/A
DES.MANAGER	S.KADY	07MAY13	
DESIGNER	S.KADY	07MAY13	

CAD SYSTEM: PRO/E | SCALE: 1:1 | SHEET NO. 1 OF 1

REFERENCE ID/REV.: 2D: AR0034847/AB
PLM REFERENCE/REV.: 000110339/AB
REFERENCE ID/REV.: 3D: AR0034846/AB
PLM REFERENCE/REV.: 3D: AR0034846/AB

DRAWING NAME: FUEL MODULE ASSEMBLY (AFT GMT900 HP)

SIZE: A0 | DRAWING NUMBER: TU465HP