REVISIONS						
ZONE	LTR	DESCRIPTION	CHANGE No	DATE	BY	APPR'D
	AA	INITIAL RELEASE	DR46328	22APR14	SLK	BLM

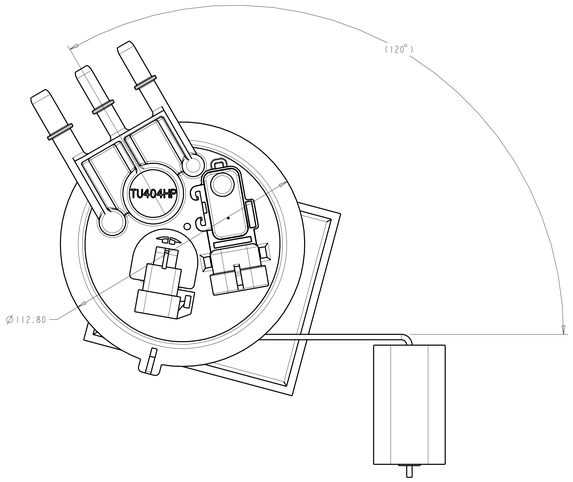

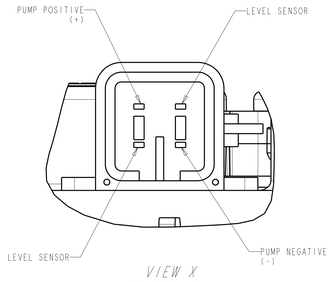

VIEW X
SCALE 3:1

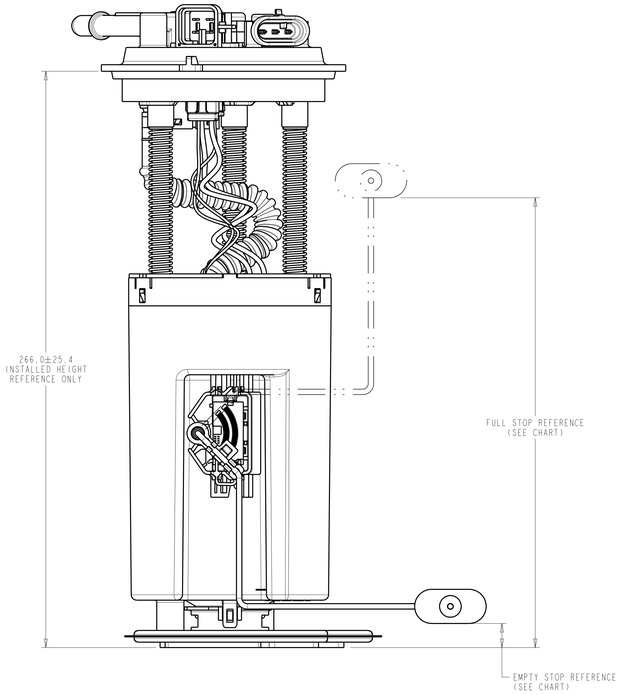

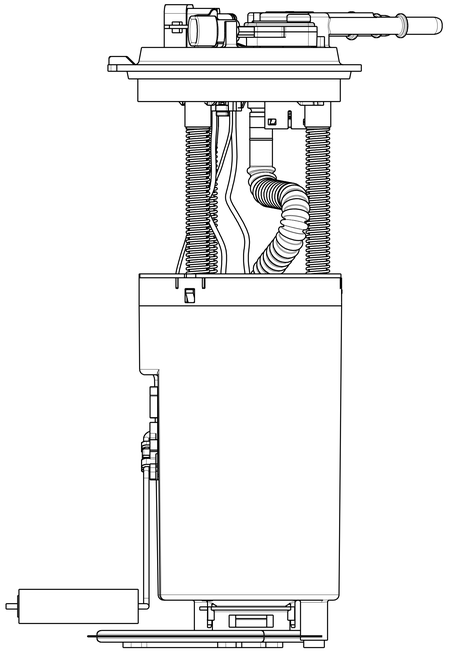

LEVEL SENDER		
POINT	HEIGHT	OHMS
FULL STOP	206.5	100
EMPTY STOP	10.0	2

NOTES:

1. CHANGE IN DESIGN, COMPOSITION, LOCATION OR PROCESSING FROM THE PART PREVIOUSLY APPROVED FOR PRODUCTION REQUIRES PRIOR APPROVAL BY TI AUTOMOTIVE.
2. PUMP USED: F20000178
3. MODULE TO BE PACKAGED USING COMPONENTS NOTED ON BOM SO THAT CONTAMINATION FROM FOREIGN MATERIAL IS PREVENTED:
   - PLUG PROTECTORS ON PORTS
   - POLYBAG

▽ - DENOTES SAFETY CHARACTERISTIC
◇ - DENOTES SIGNIFICANT CHARACTERISTIC
⟨KC⟩ - DENOTES HIGH IMPACT CHARACTERISTIC

TI AUTOMOTIVE CONFIDENTIAL AND PROPRIETARY
THIS DRAWING IS PROPERTY OF TI AUTOMOTIVE. TI AUTOMOTIVE CLAIMS PROPRIETARY RIGHTS IN THE SUBJECT MATTER SHOWN AND DESCRIBED HEREIN. THIS DRAWING IS PROVIDED TO RECIPIENT IN CONFIDENCE. THE DRAWING IS PROVIDED FOR REFERENCE PURPOSES ONLY AND ON THE EXPRESS CONDITION THAT IS WILL BE HELD IN CONFIDENCE. THIS DRAWING MAY NOT BE USED FOR ANY PURPOSE OTHER THAN TO QUOTE, PROCURE, MANUFACTURE OR OR PROCUREMENT FROM OTHERS OF THE ARTICLE OR PART SHOWN WITHOUT TI AUTOMOTIVE'S EXPRESS WRITTEN CONSENT. NO LICENSE OR RIGHT TO USE THE DRAWING OR THE SUBJECT MATTER IS GRANTED TO RECIPIENT. COPYRIGHT TI AUTOMOTIVE 2014, ALL RIGHTS RESERVED.

METRIC
ALL DIMENSIONS ARE IN MILLIMETERS

DO NOT SCALE
DECIMAL TOLERANCES UNLESS OTHERWISE SPECIFIED
ONE PLACE ±0.25 TWO PLACE ±0.13 ANGLES ±1°

THIRD ANGLE PROJECTION

DIMENSIONS IN ACCORDANCE WITH ASME Y14.5 - 2009

TI Automotive
630 COLUMBIA ST.
CARO, MI 48723
+1 989.673.7727

ENGINEER	B.MIDDLETON	22APR14	MATERIAL/SPECIFICATION: N/A
DES.MANAGER			
DESIGNER	S.KADY	22APR14	
CAD SYSTEM: PRO/E	SCALE: 1:1	SHEET NO. 1 OF 1	
REFERENCE (D/REV.):		PLM REFERENCE/REV.: 000112096/AA	
REFERENCE (D/REV.): 2D: AR0036940/AA		PLM REFERENCE/REV.: 3D: AR0036939/AA	
DRAWING NAME: FUEL MODULE ASSEMBLY (AFTMKT-GM, GAS, HP)			
SIZE: A0	DRAWING NUMBER: TU404HP		