REVISIONS							
ZONE	LTR	DESCRIPTION	CHANGE No	DATE	BY	APPR'D
	AA	INITIAL RELEASE	DR51231	08SEP15	RMB	BLM
	AB	REMOVE EXTRA GRND WIRE FRM VIEWS	DR55833	13JAN16	RMB	BLM

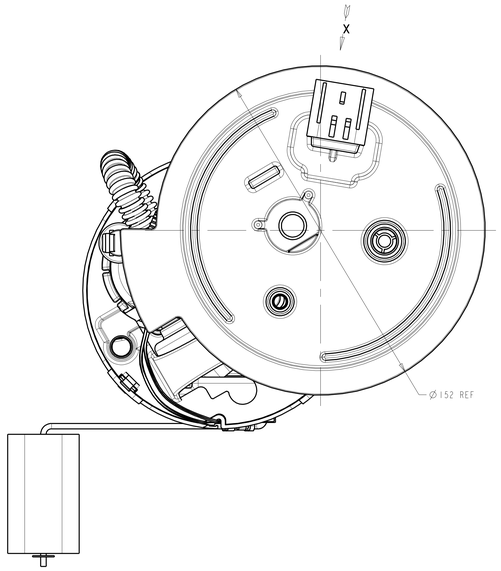

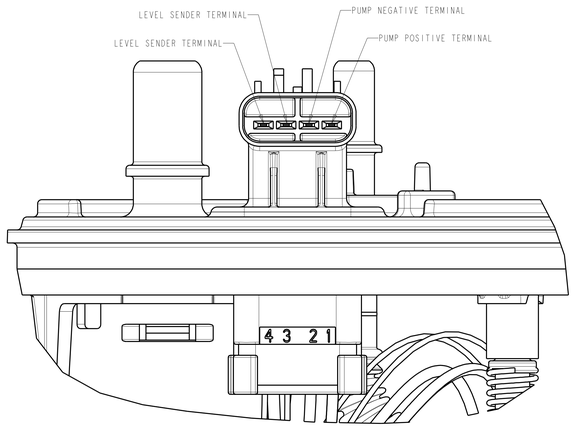

VIEW IN DIRECTION
OF ARROW "X"
E-CONNECTOR PINOUT
SCALE 2:1

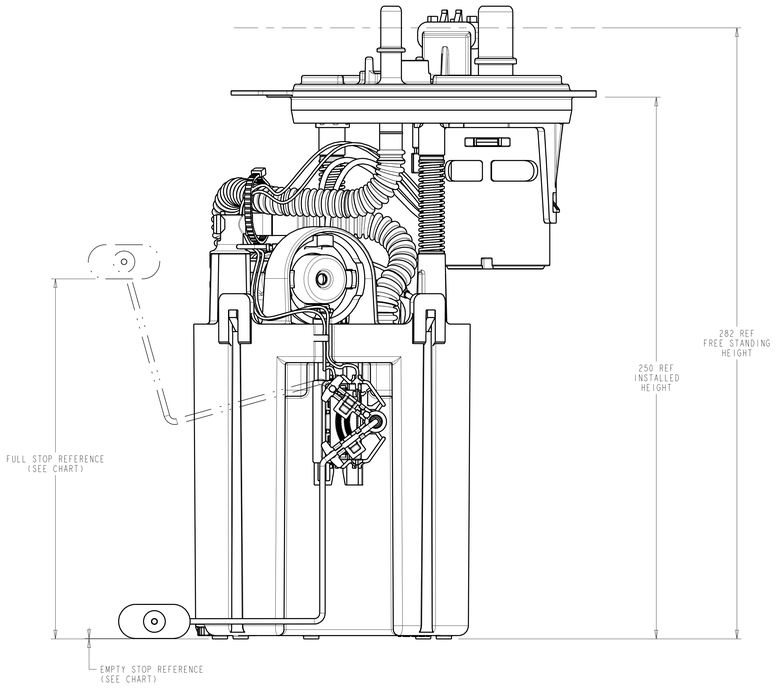

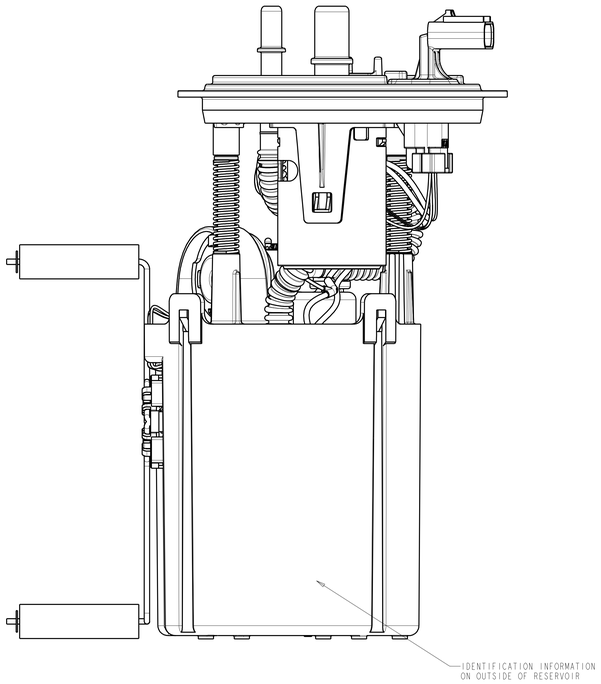

LEVEL SENDER UNIT HEIGHT VS RESISTANCE		
FLOAT POSITION	HEIGHT (mm)	RESISTANCE (Ohms)
FULL STOP	166.3 REF	10 ± 2
EMPTY STOP	0.0 REF	180 ± 4

NOTES:

1. CHANGE IN DESIGN, COMPOSITION, LOCATION OR PROCESSING FROM THE PART PREVIOUSLY APPROVED FOR PRODUCTION REQUIRES PRIOR APPROVAL BY TI AUTOMOTIVE.
2. SPECIAL CUSTOMER PACKAGING REQUIREMENTS MAY CALL FOR THE ADDITION OF SPECIFIC LABELS NOT SHOWN ON THIS DRAWING.
3. SHOWN WIRE ROUTING MAY DIFFER FROM FINISHED PRODUCT.
4. MODULE TO BE PACKAGED USING COMPONENTS NOTED ON BOM SO THAT CONTAMINATION FROM FOREIGN MATERIAL IS PREVENTED:
   - PLUG PROTECTORS ON PORTS
   - POLYBAG

▽ - DENOTES SAFETY CHARACTERISTIC
◇ - DENOTES SIGNIFICANT CHARACTERISTIC
⟨HI⟩ - DENOTES HIGH IMPACT CHARACTERISTIC

TI AUTOMOTIVE CONFIDENTIAL AND PROPRIETARY
THIS DRAWING IS PROPERTY OF TI AUTOMOTIVE. TI AUTOMOTIVE CLAIMS PROPRIETARY RIGHTS IN THE SUBJECT MATTER SHOWN AND DESCRIBED HEREIN. THIS DRAWING IS PROVIDED TO RECIPIENT IN CONFIDENCE. THE DRAWING IS PROVIDED FOR REFERENCE PURPOSES ONLY AND ON THE EXPRESS CONDITION THAT IT WILL BE HELD IN CONFIDENCE. THIS DRAWING MAY NOT BE USED FOR ANY PURPOSE OTHER THAN THE DESIGN OR MANUFACTURE OF OR PROCUREMENT FROM OTHERS OF THE ARTICLE OR PART SHOWN WITHOUT TI AUTOMOTIVE'S EXPRESS WRITTEN CONSENT. NO LICENSE OR OTHER RIGHTS ARE GRANTED TO RECIPIENT EXCEPT AS STATED ABOVE. BY ACCEPTING TO RECIPIENT. COPYRIGHT TI AUTOMOTIVE 2016, ALL RIGHTS RESERVED.

METRIC
ALL DIMENSIONS ARE IN MILLIMETERS

DO NOT SCALE
DECIMAL TOLERANCES UNLESS OTHERWISE SPECIFIED
ONE PLACE ±0.25 TWO PLACE ±0.13 ANGLES ±1°

THIRD ANGLE PROJECTION
DIMENSIONS IN ACCORDANCE WITH ASME Y14.5 - 2009

TI Automotive
630 COLUMBIA ST.
CARO, MI 48723
+1 989.673.7727

ENGINEER	B.MIDDLETON	03MAR15	MATERIAL/SPECIFICATION: N/A
DES.MANAGER			
DESIGNER	R.BRUBAKER	03MAR15	
CAD SYSTEM: PRO/E	SCALE: 1:1	SHEET NO. 1 OF 1	
REFERENCE (D/REV):		PLM REFERENCE/REV: 2D: AR0039560/AB	
REFERENCE (D/REV): 000113885/AA		PLM REFERENCE/REV: 3D: AR0039558/AB	
DRAWING NAME: FUEL MODULE(AFTMKT F150 2011 TURBO V6 GAS)			
SIZE: A0	DRAWING NUMBER: TU296HP		